25 SERIES
HC25DBxRx-V
HC25WBxRx-V



Fixed Bullet



MFZ Bullet

2 / 4 / 5 / 8 MP - IR Fixed / MFZ Bullet Cameras

3 YEAR WARRANTY

ONVIF | SGTM

OPERATIONAL

RAM	**HC25DBxRx-V**: 1 Gigabit **HC25WBxRx-V:** 2 Gigabits
Flash	2 Gigabits
Video Standard	NTSC/PAL
Scanning System	Progressive
Image Sensor	**HC25DB2R1-V/HC25DB2R2-V/HC25DB4R1-V/HC25DB4R2-V:** 1/3" **HC25WB5R1-V/HC25WB5R2-V/HC25WB8R1-V/HC25WB8R2-V**: 1/2.7"
Sensor Size (H x V)	**HC25DB2R1-V/HC25DB2R2-V:** 5.184 mm x 2.196 mm **HC25DB4R1-V/HC25DB4R2-V:** 5.120 mm x 2.880 mm **HC25WBxRx-V**: 5.76 mm × 3.24 mm
Number of Pixels (H x V)	**HC25DB2R1-V/HC25DB2R2-V:** 1920 x 1080 **HC25DB4R1-V/HC25DB4R2-V:** 2560x1440 **HC25WB5R1-V/HC25WB5R2-V**: 2880 × 1620 **HC25WB8R1-V/HC25WB8R2-V**: 3840 × 2160
Minimum Illumination (Color/BW)	**HC25DB2R1-V:** Color: 0.005 Lux@30IRE, F2.0 BW: 0 Lux (IR LED ON) **HC25DB2R2-V:** Color: 0.0045 Lux@30IRE, F1.6 BW: 0 Lux (IR LED ON) **HC25DB4R1-V:** Color: 0.008 Lux@30IRE, F2.0 BW: 0 Lux (IR LED ON) **HC25DB4R2-V:** Color: 0.007 Lux@30IRE, F1.6 BW: 0 Lux (IR LED ON) **HC25WB5R1-V**: Color: 0.01 Lux@30IRE, F2.0 BW: 0 Lux (IR LED ON) **HC25WB5R2-V**: Color: 0.009 Lux@30IRE, F1.6 BW: 0 Lux (IR LED ON) **HC25WB8R1-V**: Color: 0.02 Lux@30IRE, F2.0 BW: 0 Lux (IR LED ON) **HC25WB8R2-V**: Color: 0.02 Lux@30IRE, F1.6 BW: 0 Lux (IR LED ON)
S/N Ratio	55 dB
Electronic Shutter Speed	1/5 to 1/20,000 s
IR Distance	**HC25DB2R1-V/HC25DB4R1-V/HC25WB5R1-V/HC25WB8R1-V:** IR up to 30 m (98.4 ft) **HC25DB2R2-V/HC25DB4R2-V/HC25WB5R2-V/HC25WB8R2-V:** IR up to 40 m (131.2 ft)
IR Light Control	Smart/Manual/OFF
IR Light Number	4
Day/Night	Auto / Day Mode / Night Mode / Timing
Backlight Compensation	**HC25DBxRx-V**: WDR, BLC, HLC, LDC **HC25WBxRx-V**: WDR, BLC, HLC
White Balance	Auto / Tungsten / Fluorescent / Daylight / Shadow / Manual
Gain Control	0 ~ 100%
Wide Dynamic Range	**HC25DB2R1-V/HC25DB2R2-V:** 80 dB **HC25DB4R1-V/HC25DB4R2-V:** 90 dB **HC25WBxRx-V**: 120 db
Noise Reduction	2D / 3D DNR
Lens	**HC25DB2R1-V/HC25DB4R1-V/HC25WB5R1-V/ HC25WB8R1-V:** 2.8 mm, F2.0 **HC25DB2R2-V/HC25DB4R2-V/HC25WB5R2-V/ HC25WB8R2-V:** 2.7-13.5 mm, F1.6, MFZ
Angle of View (H x V)	**HC25DB2R1-V/HC25DB4R1-V:** H: 95°, V: 52.8° **HC25DB2R2-V/HC25DB4R2-V:** H:90.4°(Wide) ~ 29°(Tele), V: 48.1°(Wide) ~ 16.3°(Tele) **HC25WB5R1-V/HC25WB8R1-V**: H: 108°, V: 60° **HC25WB5R2-V/HC25WB8R2-V**: H: 102° (Wide) ~ 33.2° (Tele), V: 54.5° (Wide) ~ 18.5° (Tele)
Privacy Masking	Off/On (4 Areas)
Defog	Supported
Local Storage	Micro SD (up to 1 TB)
Alarm Inputs / Outputs	**HC25WBxRx-V**: 1In / 1 Out
Pan Range	0° ~ 360°
Tilt Range	0° ~ 90°
Rotation Range	0° ~ 360°

VIDEO

Video Compression	H.265 HEVC/H.264/MJPEG, Smart Codec
Resolution	**HC25DB2R1-V/HC25DB2R2-V:** Stream 1 1920 × 1080, 1280 × 720 Stream 2 704 × 576(PAL)/704 × 480(NTSC), 640 × 360, 480 × 360, 352 × 288(PAL)/352 × 240(NTSC) **HC25DB4R1-V/HC25DB4R2-V:** Stream 1 2560 x 1440, 2304 x 1296, 1920 x 1080, 1280 x 720 Stream 2 704 x 576(PAL)/704 x 480(NTSC), 640 x 360, 480 x 360, 352 x 288(PAL)/352 x 240(NTSC) **HC25WB5R1-V/HC25WB5R2-V:** Stream 1 2880 × 1620/2592 × 1520/1920 × 1080/1280 × 720 Stream 2 704 × 576(PAL)/704 × 480(NTSC)/640 × 480/352 × 288(PAL)/352 × 240(NTSC) Stream 3 640 × 480/352 × 288(PAL)/352 × 240(NTSC)/320 × 240 **HC25WB8R1-V/HC25WB8R2-V:** Stream 1 3840 × 2160, 2880 × 1620, 2592 × 1520, 2560 × 1440, 2304 × 1296, 1920 × 1080, 1280 × 720 Stream 2 704 × 576(PAL) / 704 × 480(NTSC) / 640 × 480 / 352 × 288(PAL) / 352 × 240(NTSC) Stream 3 640 × 480/352 × 288(PAL) / 352 × 240(NTSC) / 320 × 240
Number of Video Streams	**HC25DBxRx-V**: 2 **HC25WBxRx-V:** 3
Frame Rate Main Stream	**HC25DBxRx-V/HC25WB5R1-V/HC25WB5R2-V**: H.265/H.264: Max. 30fps/25fps(60Hz/50Hz) MJPEG: Max 12fps **HC25WB8R1-V/HC25WB8R2-V**: H.264/H.265: MAX 25fps (WDR on 20fps) MJPEG: Max 12fps
Frame Rate Second Stream	**HC25DBxRx-V/HC25WB5R1-V/HC25WB5R2-V**: H.265/H.264: Max. 30fps/25fps(60Hz/50Hz) MJPEG: Max 12fps **HC25WB8R1-V/HC25WB8R2-V**: H.264/H.265: MAX 25fps (WDR on 20fps) MJPEG: Max 12fps
Frame Rate Third Stream	**HC25WB5R1-V/HC25WB5R2-V**: H.265/H.264: Max. 30fps/25fps(60Hz/50Hz) MJPEG: Max 12fps **HC25WB8R1-V/HC25WB8R2-V**: H.264/H.265: MAX 25fps (WDR on 20fps) MJPEG: Max 12fps

Honeywell

25 SERIES 2 / 4 / 5 / 8 MP - IR FIXED / MFZ BULLET CAMERAS

Bit Rate	**HC25DB2R1-V/HC25DB2R2-V:** H.264/H.265 1920 × 1080, 1280 × 720 @25/30fps 500-4096kbps 704 × 576(PAL)/704 × 480(NTSC) @25/30fps 128-4096kbps 640 × 360, 480 × 360, 352 × 288(PAL)/352 × 240(NTSC) @25/30fps 128-1500kbps MJPEG 1920 × 1080, 1280 × 720 @12fps 500-4096kbps 704 × 576(PAL)/704 × 480(NTSC) @12fps 128-4096kbps 640 × 360, 480 × 360, 352 × 288(PAL)/352 × 240(NTSC) @12fps 128-1500kbps **HC25DB4R1-V/HC25DB4R2-V:** H.264/H.265 2560 × 1440, 2304 × 1296, 1920 × 1080, 1280 × 720 @25/30fps 500-3072kbps 704 × 576(PAL)/704 × 480(NTSC) @25/30fps 100-3072kbps 640 × 360, 480 × 360, 352 × 288(PAL)/352 × 240(NTSC) @25/30fps 100-1500kbps MJPEG 1920 × 1080, 1280 × 720 @12fps 500-3072kbps 704 × 576(PAL)/704 × 480(NTSC) @12fps 100-3072kbps 640 × 360, 480 × 360, 352 × 288(PAL)/352 × 240(NTSC) @12fps 100-1500kbps **HC25WB5R1-V/HC25WB5R2-V:** H.264/H.265 2880 × 1620, 2592 × 1520, 1920 × 1080 @25/30fps 500-8000kbps 1280 × 720 @25/30fps 200-8000kbps 704 × 576(PAL)/704 × 480(NTSC) @25/30fps 100-6000kbps 640 × 480 @25/30fps 100-3000kbps 352 × 288(PAL)/352 × 240(NTSC), 320 × 240 @25/30fps 100-1500kbps MJPEG 1920 × 1080 @12fps 500-8000kbps 1280 × 720 @12fps 200-8000kbps 704 × 576(PAL)/704 × 480(NTSC) @12fps 100-6000kbps 640 × 480 @12fps 100-3000kbps 352 × 288(PAL)/352 × 240(NTSC), 320 × 240 @12fps 100-1500kbps **HC25WB8R1-V/HC25WB8R2-V**: H.264/H.265 3840 × 2160, 2880 × 1620, 2592 × 1520, 2560 × 1440, 2304 × 1296, 1920 × 1080 @25fps (WDR on 20fps) 500-8000kbps 1280 × 720 @25fps (WDR on 20fps) 200-8000kbps 704 × 576(PAL)/704 × 480(NTSC) @25fps (WDR on 20fps) 100-6000kbps 640 × 480 @25fps (WDR on 20fps) 100-3000kbps 352 × 288(PAL)/352 × 240(NTSC), 320 × 240 @25fps (WDR on 20fps) 100-1500kbps MJPEG 1920 × 1080 @12fps 500-8000kbps 1280 × 720 @12fps 200-8000kbps 704 × 576(PAL)/704 × 480(NTSC) @12fps 100-6000kbps 640 × 480 @12fps 100-3000kbps 352 × 288(PAL)/352 × 240(NTSC), 320 × 240 @12fps 100-1500kbps

AUDIO

Audio Compression	G711ALAW, G711ULAW, RAWPCM
Audio Stream	**HC25DBxRx-V**: 1-way, audio input **HC25WBxRx-V**: 2-way, full duplex
Audio Interface	**HC25DBxRx-V**: Built-in Mic **HC25WBxRx-V**: 1 Line In / 1 Line Out, Built-in Mic

NETWORK

Ethernet	10 Base-T/100 Base-TX Ethernet (RJ-45)
Supported Web Browsers	Chrome, Firefox, Microsoft Edge
Supported OS	Microsoft Windows 10, 11
Protocols*	IPv4, IPv6, TCP / IP, HTTP, HTTPS, UPnP, RTSP / RTP / RTCP, IGMP / Multicast, SMTP, DHCP, NTP, DNS, QoS, SNMP, 802.1X, UDP, ICMP, ARP, TLS/SSL, FTP/SFTP/FTPS, DDNS, Bonjour, System Log
Interoperability	ONVIF Profile S, G, T, M
Maximum Users Access	10 Users
Security	User account and password protection, HTTPS, IP Filter, Digest authentication, TLS1.3, Stream encryption, AES128 /256, SSH / Telnet closed OS / Firmware Protect, Firmware encryption User authentication Digest Authentication, Prevent brute-force attack Network authentication 802.1X Authentication(EAP-TLS) Audit User Access/System/Event log management Secure Storage SD card partition encryption Secure Boot
Languages Supported	Arabic, Chinese (Traditional), Czech, Dutch, English, French, German, Italian, Japanese, Korean, Polish, Portuguese (Brazil), Spanish, Turkish

EVENTS/ANALYTICS

Video Analytics	**HC25DBxRx-V**: Motion detection, Smart motion, Scene change, Intrusion, Line crossing **HC25WBxRx-V**: Motion detection, Smart motion, Scene Change, Intrusion, Multi loitering, People counter, Line crossing Detection, Face Detection, Unattended Object, MissingObject, Multi-Object Detection
Event Type	**HC25DBxRx-V**: Analytics alarm, Security alarm, SD Card Alarm, Recording alarm, Audio Detection, Illegal Access Alarm **HC25WBxRx-V**: Analytics alarm, Security alarm, SD Card Alarm, Recording alarm, Alarm input, Audio Detection, Illegal Access Alarm
Event Linkage	**HC25DBxRx-V**: SMTP, Alarm record, FTP Uploading **HC25WBxRx-V**: SMTP, Alarm record, FTP Uploading, Alarm Output, Audio Output
Region of Interest	8

ELECTRICAL

Power Supply	DC12V⎓1A; or PoE 44-57V⎓, 350mA
Power Consumption (Max)	**HC25DB2R1-V:** Max.6.5 W **HC25DB2R2-V:** Max.6.4 W **HC25DB4R1-V:** Max.6.7 W **HC25DB4R2-V:** Max.6.6 W **HC25WB5R1-V/HC25WB5R2-V**: Max. 5.6 W **HC25WB8R1-V**: Max.5.8 W **HC25WB8R2-V**: Max.6.5 W

MECHANICAL

Dimensions	193.8 × Ø87.0 × Ø87.0 mm (7.63 × Ø3.43 × Ø3.43 inch)
Product Weight	**HC25DB2R1-V:** 0.52 kg (1.15 lb) **HC25DB2R2-V/HC25WB8R1-V:** 0.54 kg (1.19 lb) **HC25DB4R1-V:** 0.57 kg (1.26 lb) **HC25DB4R2-V:** 0.49 kg (1.08 lb) **HC25WB5R1-V**: 0.58kg (1.28 lb) **HC25WB5R2-V/HC25WB8R2-V**: 0.56kg (1.23 lb)
Package Weight	**HC25DB2R1-V:** 0.66 kg (1.46 lb) **HC25DB2R2-V/HC25DB4R2-V:** 0.69 kg (1.52 lb) **HC25DB4R1-V:** 0.65 kg (1.43 lb) **HC25WB5R1-V**: 0.71kg (1.57 lb) **HC25WB5R2-V/HC25WB8R2-V**: 0.70kg (1.54 lb) **HC25WB8R1-V**: 0.68kg (1.5 lb)
Body Material	Metal
Color	White (RAL9003)+Black

ENVIRONMENTAL

Operating Temperature	**HC25DBxRx-V**: -25°C ~ 55°C (-13°F ~ 131°F) **HC25WBxRx-V**: -30°C ~ 60°C (-22°F ~ 140°F)
Relative Humidity	Less than 90 %, non-condensing
Ingress Protection	IP66
Impact Resistance	IK10 Housing

REGULATORY

Emissions	FCC Part15B. ICES-003, CE EN55032, Complies with UKCA and RCM
Immunity	CE(EN 50130-4, EN 55035), Complies with RCM and UKCA
Safety	CE(EN 62368-1), Complies with UKCA and RCM
RoHS	CE(EN 63000), UAE(Cabinet Decree No.10 of 2017)
Country of Origin	Vietnam
Warranty	3 year

* Some development may be required in specific user cases to support some of these protocols in the field as they mature over time.

25 SERIES 2 / 4 / 5 / 8 MP - IR FIXED / MFZ BULLET CAMERAS

DIMENSIONS

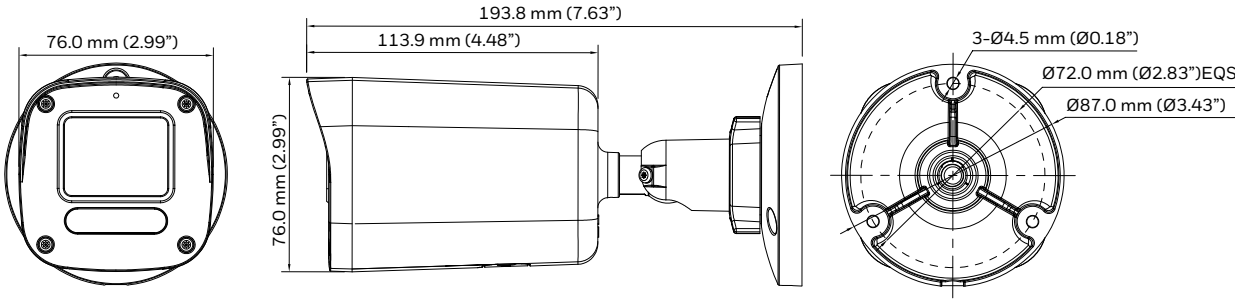

SYSTEM COMPATIBILITY & RECOMMENDED ACCESSORIES

SYSTEM COMPATIBILITY	
MAXPRO NVR HE	Up to 256 IP channels RAID5/6 enterprise NVR
MAXPRO NVR PE	Up to 192 IP channels RAID5/6 enterprise NVR
MAXPRO NVR SE	Up to 96 IP channels system NVR
MAXPRO NVR XE	Up to 24 IP channels system NVR
MAXPRO NVR Software	Up to 256 IP channels recording software
Milestone	Honeywell – Milestone Plug in
25 Series NVR	4/8/16-channel 25 series NVRs
35 Series NVR	4/8/16/32/64-channel 35 series NVRs

OPTIONAL MOUNTS AND ACCESSORIES*	
HA35PMC03	35S fixed camera cap, 1.5NPT male
HA35CLM01	35S ceiling mount base with adapter
HA35CLM02	35S ceiling mount pendent extension, 252mm
HA35JCBHBA	35S bullet junction box
HA35PLM01	35S pole mount bracket
HA35CNM01	35S corner mount bracket

* Mounting accessories, unless otherwise noted, are not included with camera and must be ordered separately. Please refer to the cross reference matrix or accessories datasheet for detailed information.

ORDERING

ORDERING	
HC25DB2R1-V	25S 2MP IR Fixed Bullet, 2.8 mm, PoE, COO Vietnam
HC25DB2R2-V	25S 2MP IR MFZ Bullet, 2.7-13.5 mm, PoE, COO Vietnam
HC25DB4R1-V	25S 4MP IR Fixed Bullet, 2.8 mm, PoE, COO Vietnam
HC25DB4R2-V	25S 4MP IR MFZ Bullet ,2.7-13.5 mm, PoE, COO Vietnam

ORDERING	
HC25WB5R1-V	25S WDR 5 MP IR Fixed Bullet, 2.8 mm, PoE, COO Vietnam
HC25WB5R2-V	25S WDR 5 MP IR MFZ Bullet, 2.7-13.5 mm, PoE, COO Vietnam
HC25WB8R1-V	25S WDR 8 MP IR Fixed Bullet, 2.8 mm, PoE, COO Vietnam
HC25WB8R2-V	25S WDR 8 MP IR MFZ Bullet, 2.7-13.5 mm, PoE, COO Vietnam

For More Information
hwll.co/securityUK

Building Automation
Commercial Security
Building 5 Carlton Park
King Edward Avenue
Narborough, Leicester
LE19 0LF
Tel: +44 (0)1163 500714
www.honeywell.com

HEVCAdvance™

ONVIF and the ONVIF logo are trademarks of ONVIF Inc.
HEVC Advance logo is a trademark of HEVC Advance.
Honeywell reserves the right, without notification, to make changes in product design or specifications.

HBA-SEC-25S-HC25DBxRx-V HC25WBxRx-V-DS-UK-EN-02-2026-V01-Y
© 2026 Honeywell International Inc.

Honeywell